Milder
Veelzijdig in leidingsystemen

Technische gegevens – maatschets

GY Vlinderklep met RVS Blad voor Water

Art. 2733

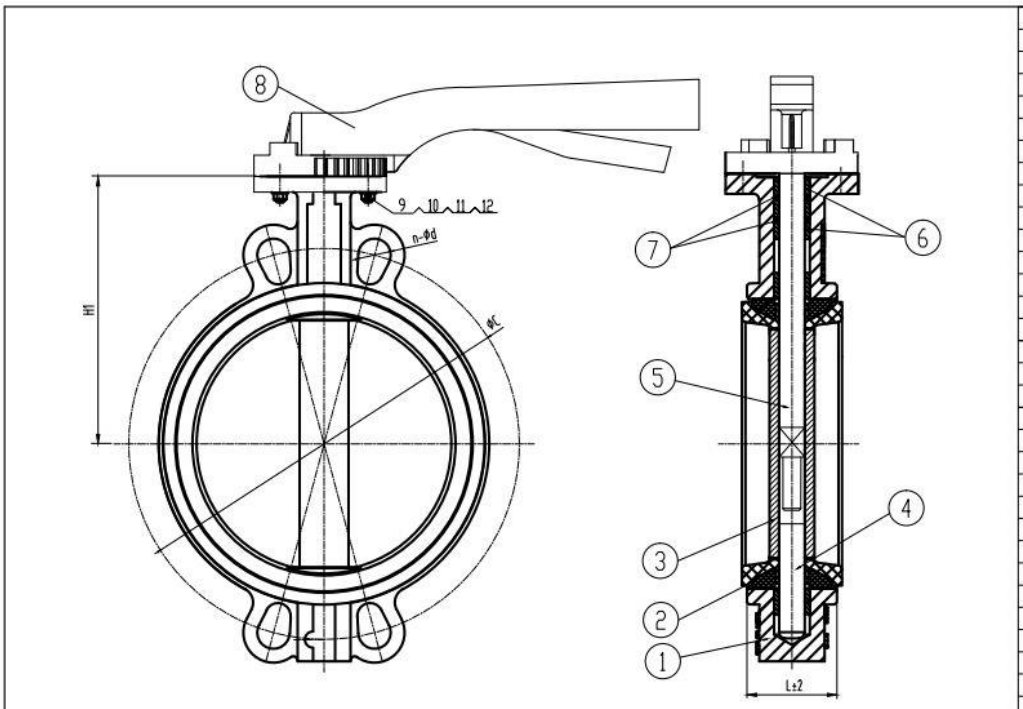

	Design	ISO 10631
	Flange	ISO 7005
	Face To Face	ISO 5752
	Tests	EN 12266-1
	Top Flange Standard	ISO 5211
	Reference Standard	
	Drive Form	Hand Lever
	Medium	Water
	Temperature	-10°C~100°C
	Seal Test	11/18 Bar
	Body Test	15/24 Bar
	PN	10/16 Bar
	DN	DN50-200
	Main Technical Parameters	
12	Flat Washer	AISI201 STAINLESS STEEL
11	Spring Washer	AISI201 STAINLESS STEEL
10	Nut	AISI201 STAINLESS STEEL
9	Bolt	AISI201 STAINLESS STEEL
8	Hand Lever	AL
7	O Ring	EPDM
6	Bush	PTFE
5	Shaft	AISI420 STAINLESS STEEL
4	Shaft	AISI420 STAINLESS STEEL
3	Disc	AISI316 STAINLESS STEEL
2	Seat	EPDM
1	Body	DUCTILE IRON
No.	Name	Materials

DN	INCH	L±2	H±5	H1±3	PN10		PN16	
mm	in				ØC	n-Ød	ØC	n-Ød
50	2	43	190	125.5	125	4-Ø19	125	4-Ø19
65	2.5	46	232	145.5	145	4-Ø19	145	4-Ø19
80	3	46	244	150	160	8-Ø19	160	8-Ø19
100	4	52	276	167	180	8-Ø19	180	8-Ø19
125	5	56	308	181	210	8-Ø19	210	8-Ø19
150	6	56	340	195	240	8-Ø23	240	8-Ø23
200	8	60	404	229	295	8-Ø23	295	12-Ø23

Assembly Drawing

Wafer type Butterfly Valve

8 juli 2024

Milder Bemmel
026 - 325 91 03
bemmel@milder.nl

Milder Rotterdam
010 - 415 99 83
rotterdam@milder.nl